1. General Description

A: SPECIFICATION

1. HEATER SYSTEM

Item		Specification	Condition
Heating capacity		5.0 kW (4,300 kcal/h, 17,062 BTU/h) or more	• Mode selector switch: HEAT • Temperature control switch: FULL HOT • Temperature difference between hot water and inlet air: 65°C (149°F) • How water flow rate: 360 ℓ (95.1 US gal, 79.2 Imp gal)/h
Air flow rate		280 m^3 (9,888 cu ft) /h	Heat mode (FRESH), FULL HOT at 12.5 V
Max air flow rate		450 m^3 (15,892 cu ft)/h	• Temperature control switch: FULL COLD • Blower fan speed: Maximum air flow • Mode selector lever: Recirculate
Heater core size (height × length × width)		163.9 × 200 × 25.0 mm (6.45 × 7.87 × 0.984 in)	—
Blower motor	Type	Magnet motor 200 W or less	12 V
	Fan type and size (diameter × width)	Sirocco fan type 150 × 75 mm (5.91 × 2.95 in)	—

2. A/C SYSTEM

Auto A/C model

Item			Specification
Type of air conditioner			Reheat air-mix type
Cooling capacity			5.1 kW (4,385 kcal/h, 17,402 BTU/h)
Refrigerant			HFC-134a (CH_2FCF_3) [0.5±0.05 kg (0.99±0.11 lb)]
Compressor		Type	Vane rotary, fix volume (CR-14)
		Discharge	144 cm^3 (8.79 cu in)/rev
		Max. permissible speed	7,000 rpm
Magnet clutch		Type	Dry, single-disc type
		Power consumption	47 W
		Type of belt	V-belt 4 PK
		Pulley dia. (effective dia.)	125 mm (4.92 in)
		Pulley ratio	1.064
Condenser		Type	Corrugated fin (Sub cool type)
		Core face area	0.21 m^2 (2.26 sq ft)
		Core thickness	16 mm (0.63 in)
		Radiation area	5.34 m^2 (57.48 sq ft)
Receiver drier		Effective inner capacity	250 cm^3 (15.26 cu in)
Expansion valve		Type	Internally equalizing
Evaporator		Type	Single tank
		Dimensions (W × H × T)	255 × 200 × 48 mm (10 × 7.87 × 1.89 in)
Blower fan		Fan type	Sirocco fan
		Outer diameter × width	150 × 75 mm (5.91 × 2.95 in)
		Power consumption	200 W
Condenser fan (Sub fan)		Motor type	Magnet
		Power consumption	120 W
		Fan outer diameter	320 mm (12.6 in)
Radiator fan (Main fan)		Motor type	Magnet
		Power consumption	120 W
		Fan outer diameter	320 mm (12.6 in)
Idling speed (A/C ON)		MPFI model	850±100 rpm
Dual switch (pressure switch)	Low-pressure switch operating pressure	ON → OFF	278±29 kPa (2.83±0.3 kgf/cm^2, 40.3±4.2 psi)
		OFF → ON	287^{+39}_{-25} kPa ($2.9^{+0.4}_{-0.25}$ kgf/cm^2, $42^{+5.7}_{-3.6}$ psi)
	High-pressure switch operating pressure	ON → OFF	2,800±100 kPa (29±1 kgf/cm^2, 406±15 psi)
		OFF → ON	600±200 kPa (6.12±2 kgf/cm^2, 87±29 psi)
Thermo-control amplifier working temperature (Evaporator outlet air)		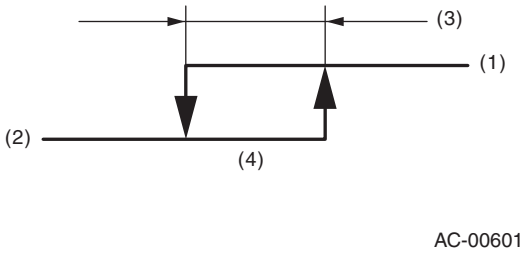 1. ON 2. OFF 3. 2.5±0.5°C (36.5±0.9°F) 4. 1.5±0.5°C (35±0.9°F)	

Manual A/C model

Item			Specification
Type of air conditioner			Reheat air-mix type
Cooling capacity			5.1 kW (4,385 kcal/h, 17,402 BTU/h)
Refrigerant			HFC-134a (CH_2FCF_3) [0.5±0.05 kg (1.10±0.11 lb)]
Compressor		Type	Vane rotary, fix volume (CR-14)
		Discharge	144 cm^3 (8.79 cu in) per rotation
		Max. permissible speed	7,000 rpm
Magnet clutch		Type	Dry, single-disc type
		Power consumption	47 W
		Type of belt	V-belt 4 PK
		Pulley dia. (effective dia.)	125 mm (4.92 in)
		Pulley ratio	1.064
Condenser		Type	Corrugated fin (Sub cool type)
		Core face area	0.21 m^2 (2.26 sq ft)
		Core thickness	16 mm (0.63 in)
		Radiation area	5.34 m^2 (57.48 sq ft)
Receiver drier		Effective inner capacity	250 cm^3 (15.26 cu in)
Expansion valve		Type	Externally equalizing
Evaporator		Type	Single tank
		Dimensions (W × H × T)	255 × 200 × 48 mm (10 × 7.87 × 1.89 in)
Blower fan		Fan type	Sirocco fan
		Outer diameter × width	150 × 75 mm (5.91 × 2.95 in)
		Power consumption	200 W
Condenser fan (Sub fan)		Motor type	Magnet
		Power consumption	120 W
		Fan outer diameter	320 mm (12.6 in)
Radiator fan (Main fan)		Motor type	Magnet
		Power consumption	120 W
		Fan outer diameter	320 mm (12.6 in)
Idling speed (A/C ON)		MPFI model	850±100 rpm
Dual switch (pressure switch)	Low-pressure switch operating pressure	ON → OFF	278±29 kPa (2.83±0.3 kgf/cm^2, 40.3±4.2 psi)
		OFF → ON	287^{+39}_{-25} kPa ($2.9^{+0.4}_{-0.25}$ kgf/cm^2, $42^{+5.7}_{-3.6}$ psi)
	High-pressure switch operating pressure	ON → OFF	2,800±100 kPa (29±1 kgf/cm^2, 406±15 psi)
		OFF → ON	600±200 kPa (6.12±2 kgf/cm^2, 87±29 psi)
Thermo control amplifier working temperature (Evaporator outlet air)		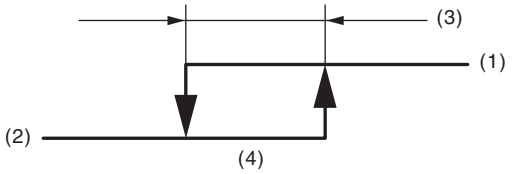 AC-00601 1. ON 2. OFF 3. 1.5±0.5°C (35±0.9°F) 4. 3.0±0.5°C (37±0.9°F)	

B: COMPONENT

1. HEATER COOLING UNIT

Auto A/C model

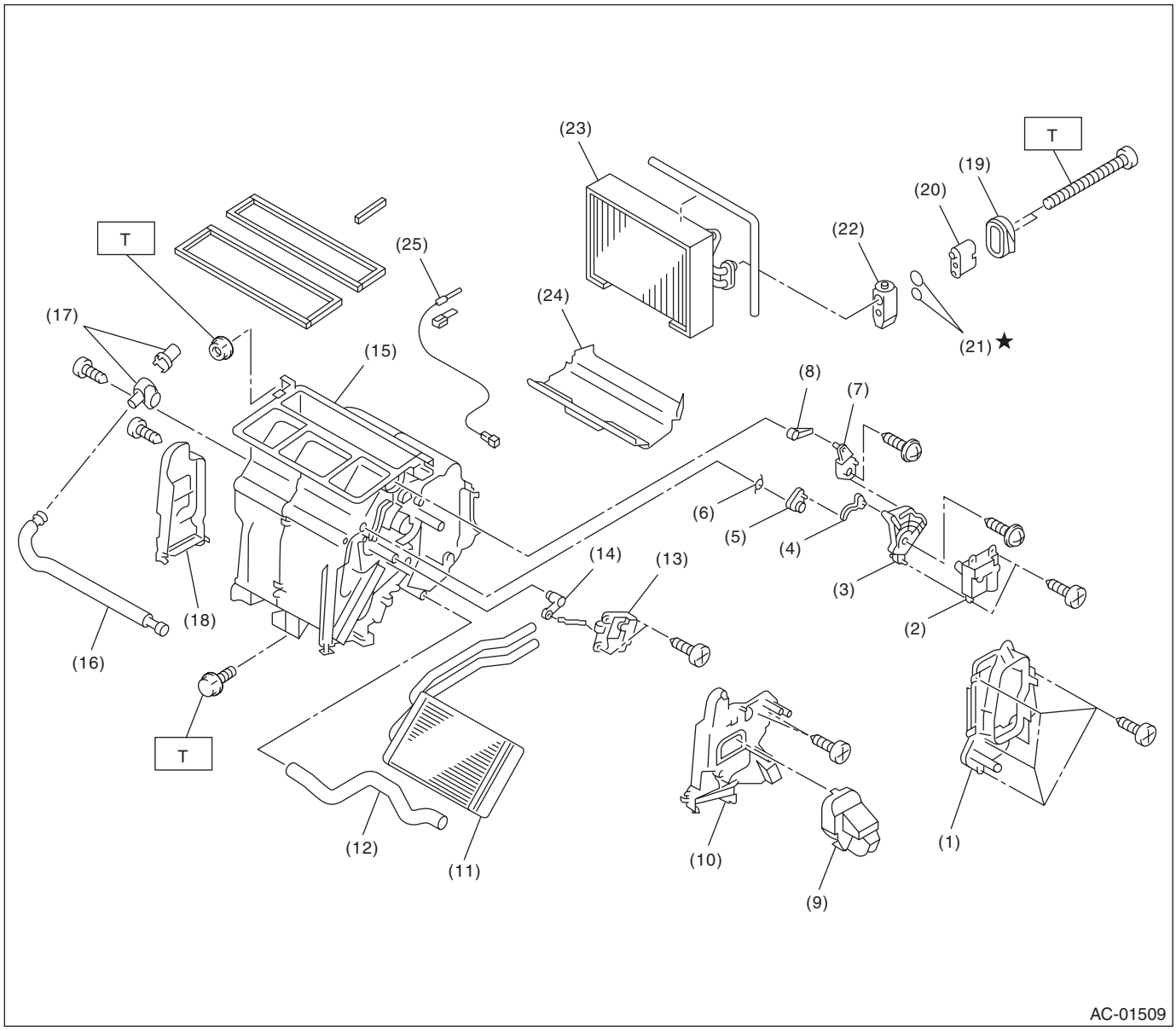

(1)	Unit cover	(11)	Heater core	(20)	Cooling unit block
(2)	Mode actuator	(12)	Drain hose	(21)	O-ring
(3)	Side link	(13)	Mix actuator	(22)	Expansion valve
(4)	Mode actuator lever	(14)	Mix actuator lever	(23)	Evaporator
(5)	Foot lever	(15)	Unit ASSY	(24)	Evaporator cover
(6)	Spring	(16)	Aspirator hose	(25)	Thermistor
(7)	Mode actuator link	(17)	Aspirator		
(8)	Defroster lever	(18)	Foot duct		
(9)	Foot nozzle	(19)	Gasket		
(10)	Unit duct cover				

Tightening torque:N·m (kgf-m, ft-lb)
T: 7.5 (0.76, 5.5)

Manual A/C model

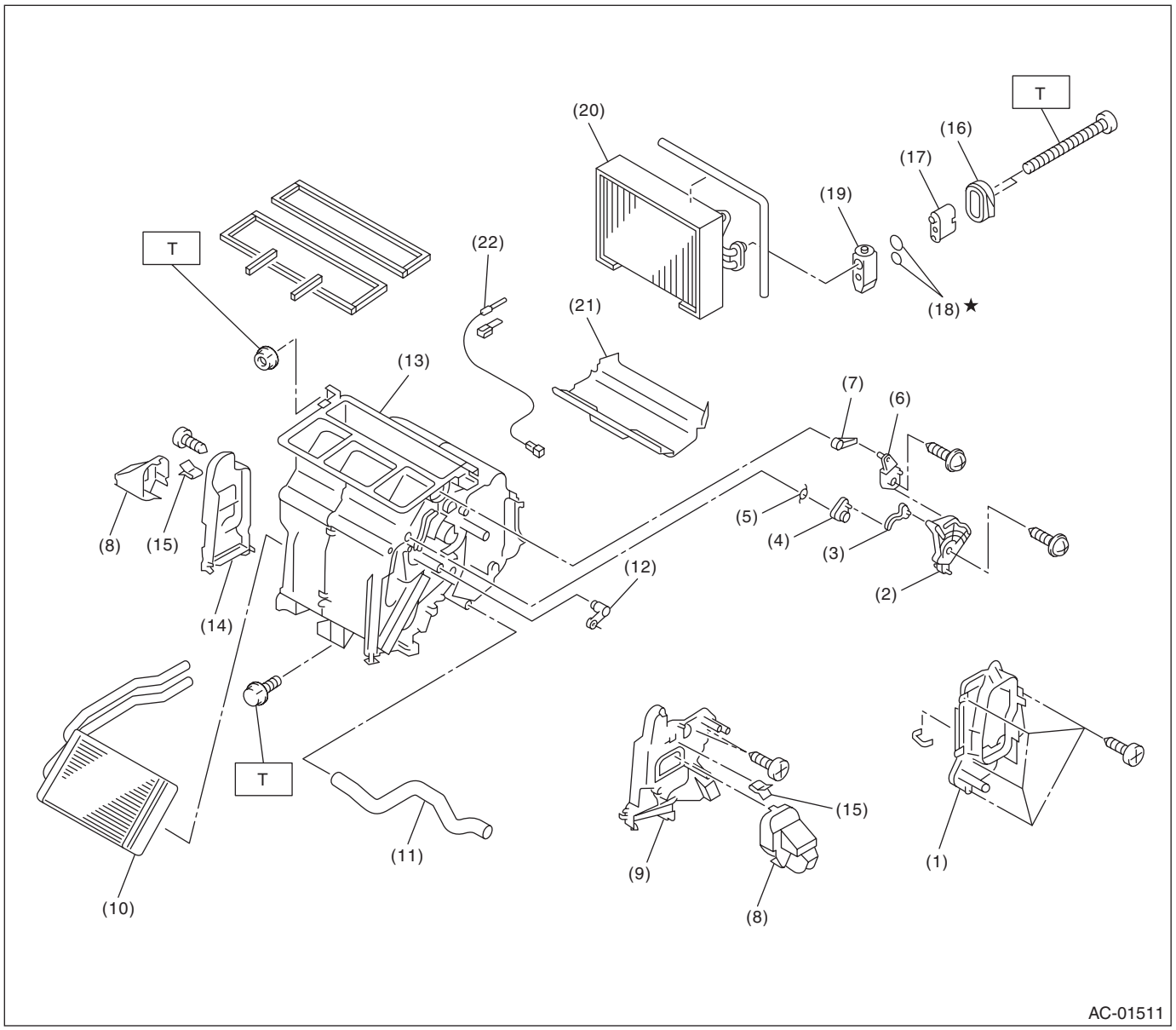

(1)	Unit cover	(10)	Heater core	(18)	O-ring
(2)	Side link	(11)	Drain hose	(19)	Expansion valve
(3)	Mode lever	(12)	Mix lever	(20)	Evaporator
(4)	Foot lever	(13)	Unit ASSY	(21)	Evaporator cover
(5)	Spring	(14)	Foot duct	(22)	Thermistor
(6)	Mode link	(15)	Clip		
(7)	Defroster lever	(16)	Gasket		
(8)	Foot nozzle	(17)	Cooling unit block		
(9)	Unit duct cover				

Tightening torque:N·m (kgf-m, ft-lb)
T: 7.5 (0.76, 5.5)

2. BLOWER MOTOR UNIT

Auto A/C model

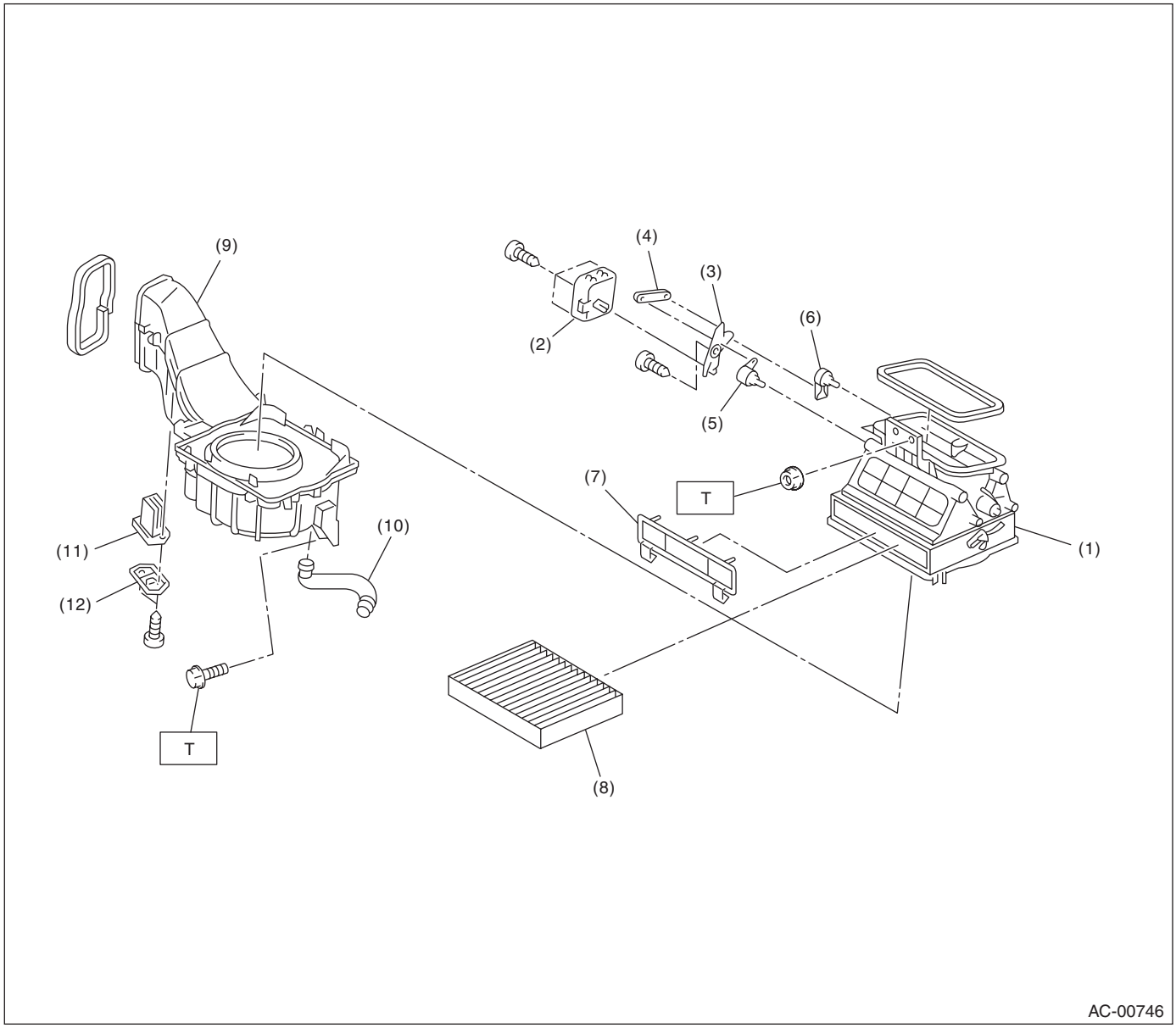

(1)	Upper case	(6)	Blower link lever C	(11)	Power transistor
(2)	Servo motor	(7)	Filter cover	(12)	Power transistor cover
(3)	Blower link	(8)	Filter		
(4)	Blower link lever A	(9)	Blower motor ASSY		
(5)	Blower link lever B	(10)	Hose		

Tightening torque:N·m (kgf-m, ft-lb)
T: 7.5 (0.76, 5.5)

Manual A/C model

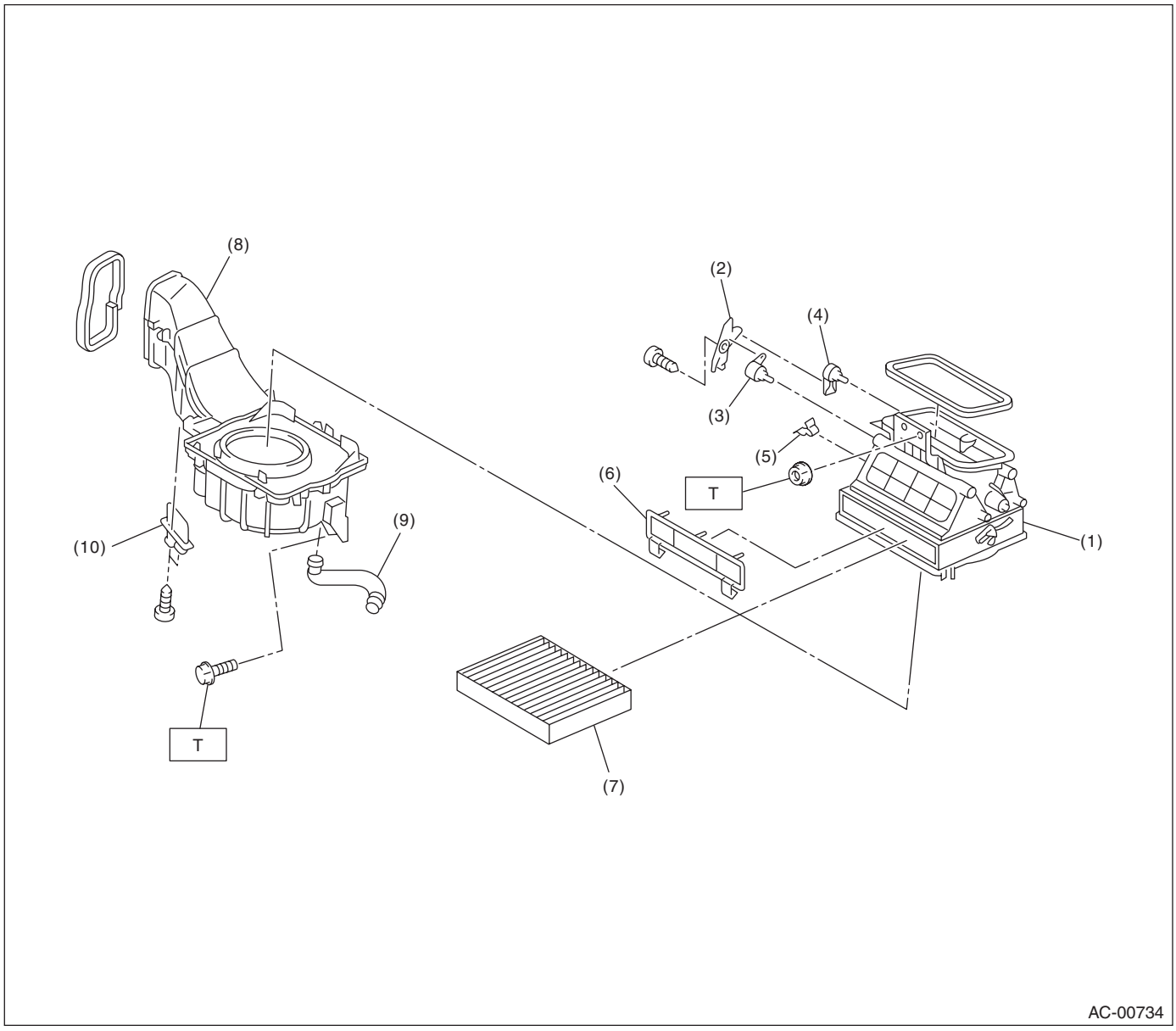

(1) Upper case
(2) Blower link
(3) Blower link lever A
(4) Blower link lever B
(5) Clip
(6) Filter cover
(7) Filter
(8) Blower motor ASSY
(9) Hose
(10) Blower resistor

Tightening torque:N·m (kgf-m, ft-lb)
T: 7.5 (0.76, 5.5)

3. CONTROL MODULE

Auto A/C model

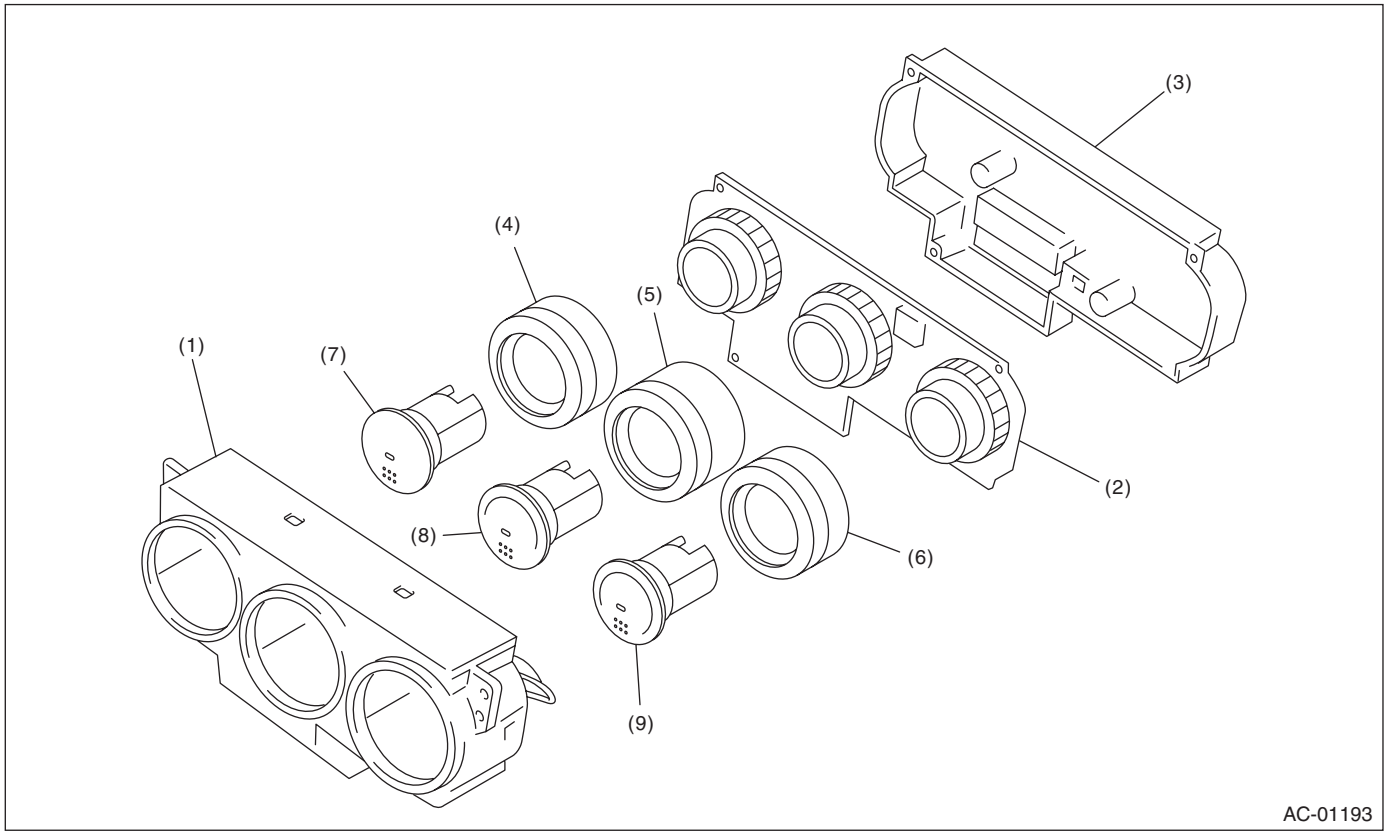

(1)	Panel	(4)	Mode control dial	(7)	Rear window defogger switch
(2)	Switch board	(5)	Fan speed control dial	(8)	FRESH/RECIRC switch
(3)	Control case	(6)	Temperature adjustment dial	(9)	A/C switch

Manual A/C model

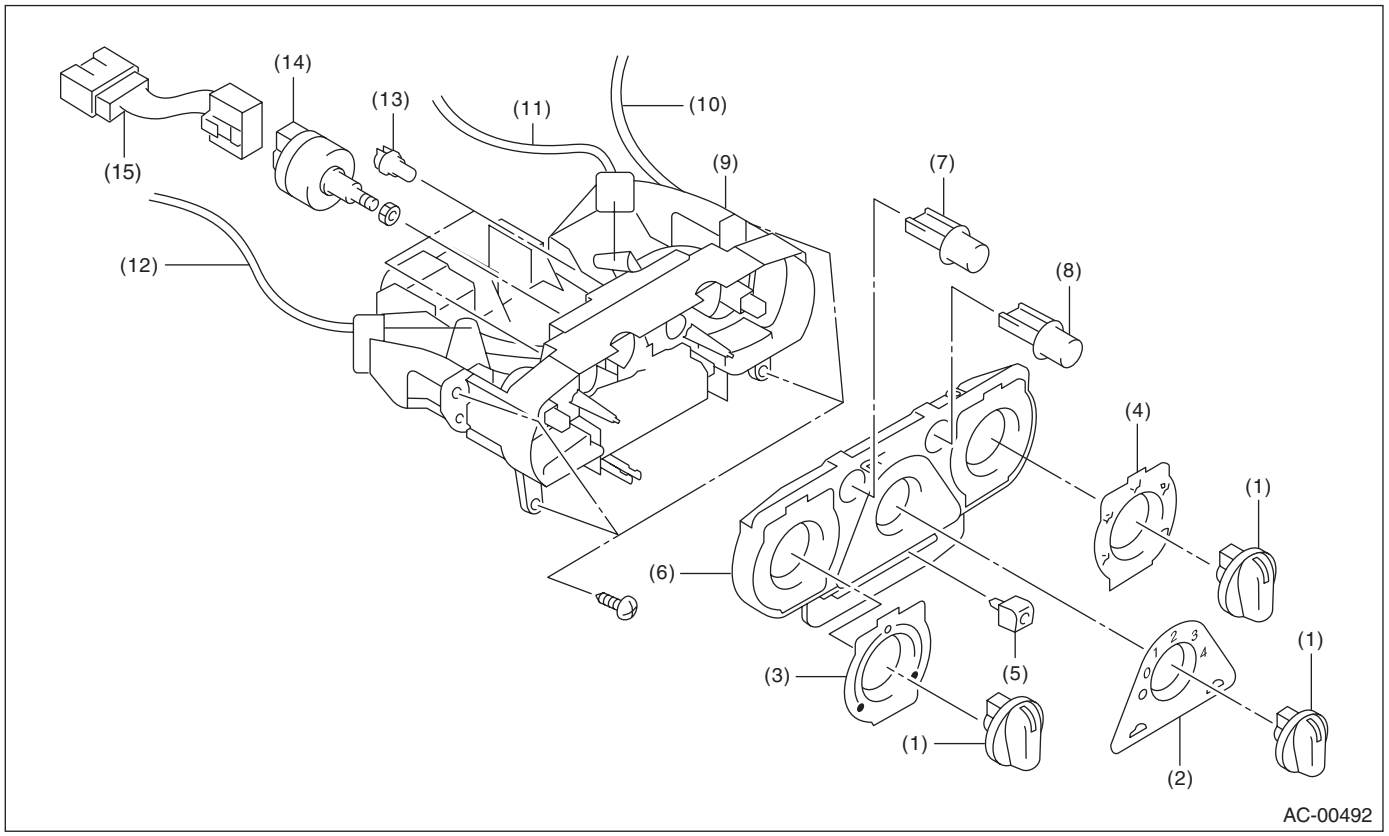

(1)	Dial	(6)	Heater control panel	(11)	Mode switch cable
(2)	Fan control plate	(7)	A/C switch	(12)	Temperature control cable
(3)	Temperature control plate	(8)	Rear window defogger switch	(13)	Valve
(4)	Mode control plate	(9)	Heater control base	(14)	FAN switch ASSY
(5)	FRESH/RECIRC switching knob	(10)	Intake cable	(15)	Harness

4. AIR CONDITIONING UNIT

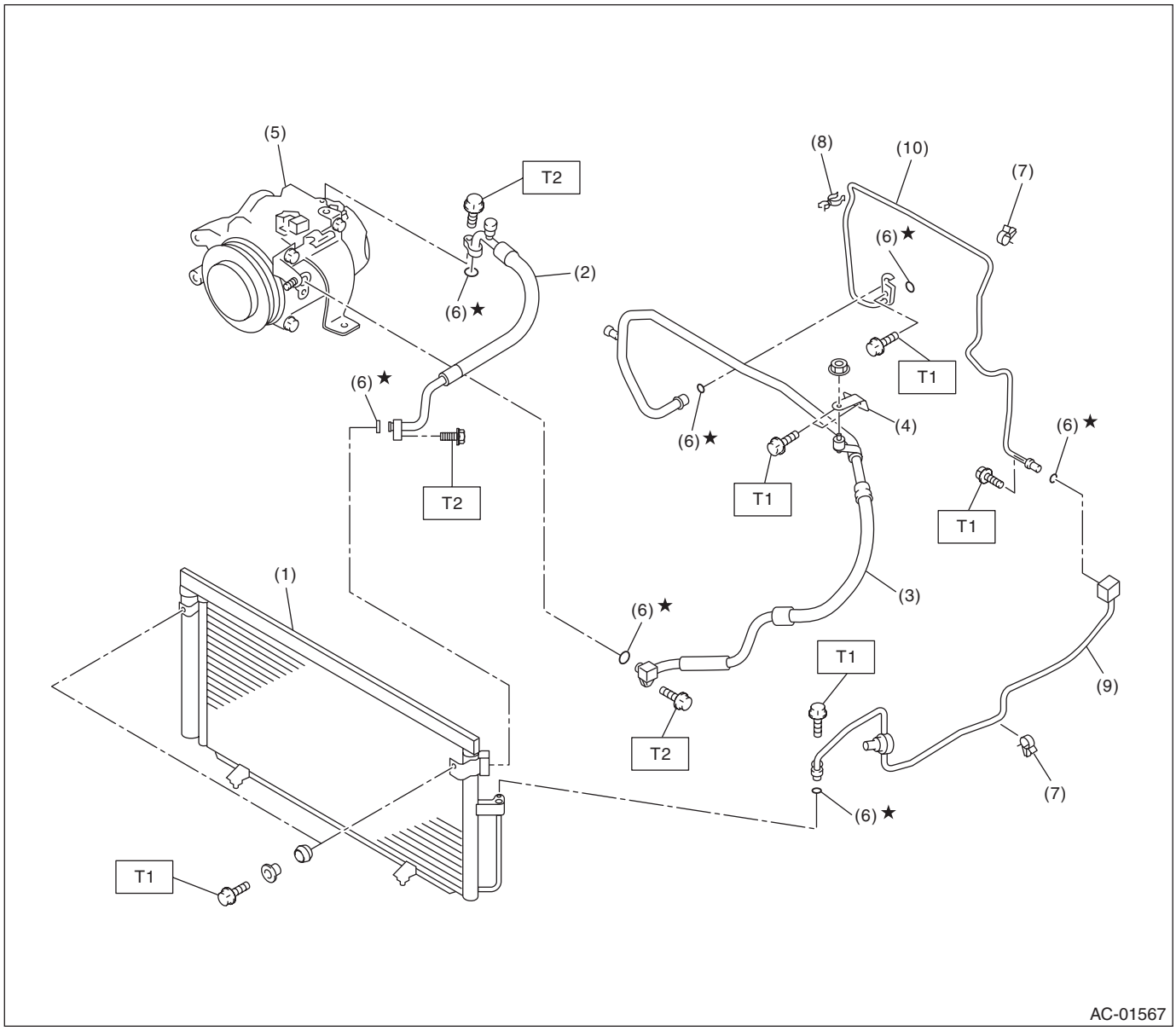

(1)	Condenser	(6)	O-ring
(2)	High-pressure hose	(7)	Clamp A
(3)	Low-pressure hose	(8)	Clamp B
(4)	Bracket	(9)	Pipe (To condenser)
(5)	Compressor	(10)	Pipe (To evaporator)

Tightening torque:N·m (kgf-m, ft-lb)
T1: 7.5 (0.76, 5.5)
T2: 15 (1.5, 10.8)

5. COMPRESSOR

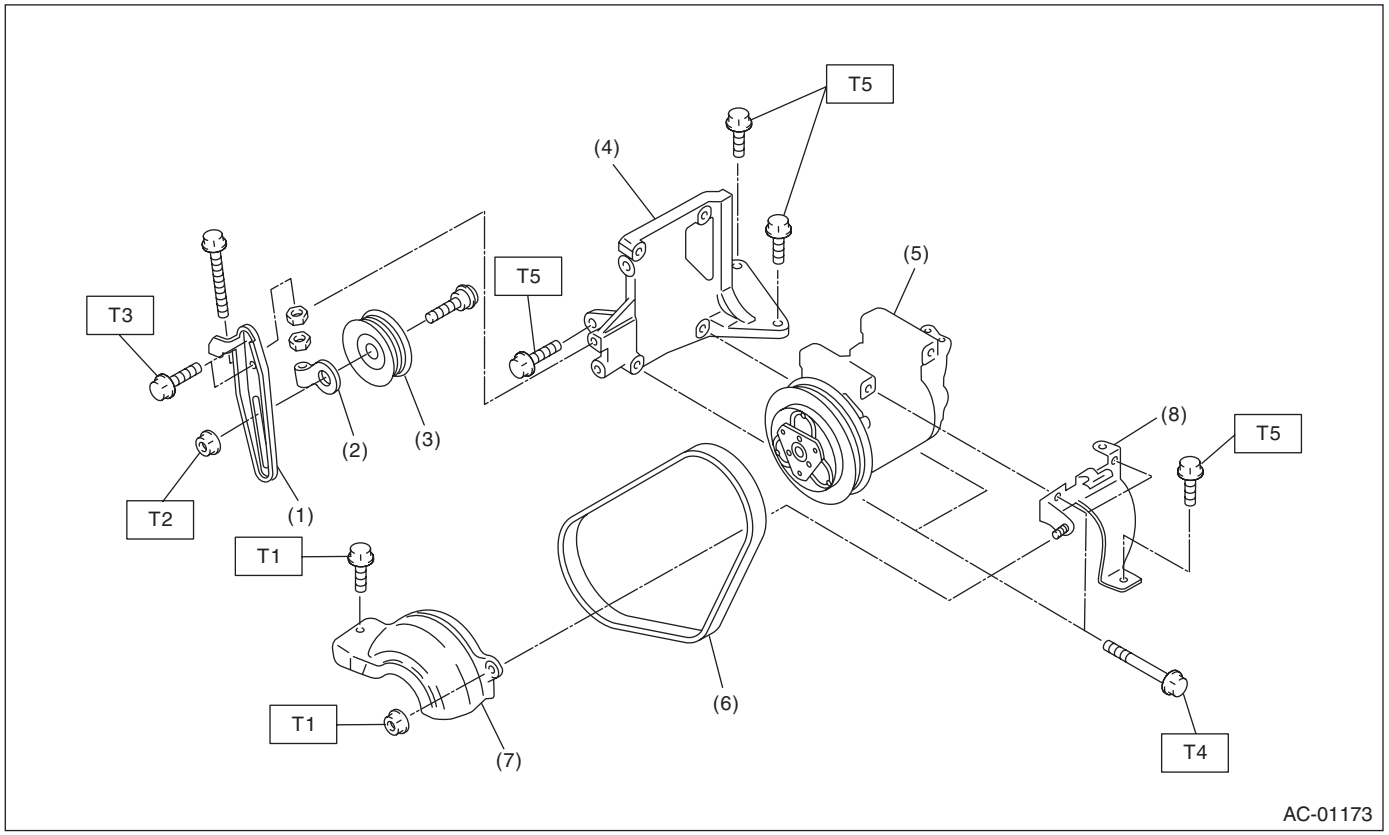

(1)	Idler pulley bracket	(5)	Compressor
(2)	Idler pulley adjuster	(6)	V-belt
(3)	Idler pulley	(7)	Compressor belt cover
(4)	Compressor upper bracket	(8)	Compressor bracket

Tightening torque:N·m (kgf-m, ft-lb)

T1: 7.5 (0.76, 5.5)
T2: 22.6 (2.3, 16.6)
T3: 23.0 (2.35, 17.0)
T4: 28.9 (2.95, 21.3)
T5: 35 (3.6, 26)

6. HEATER DUCT

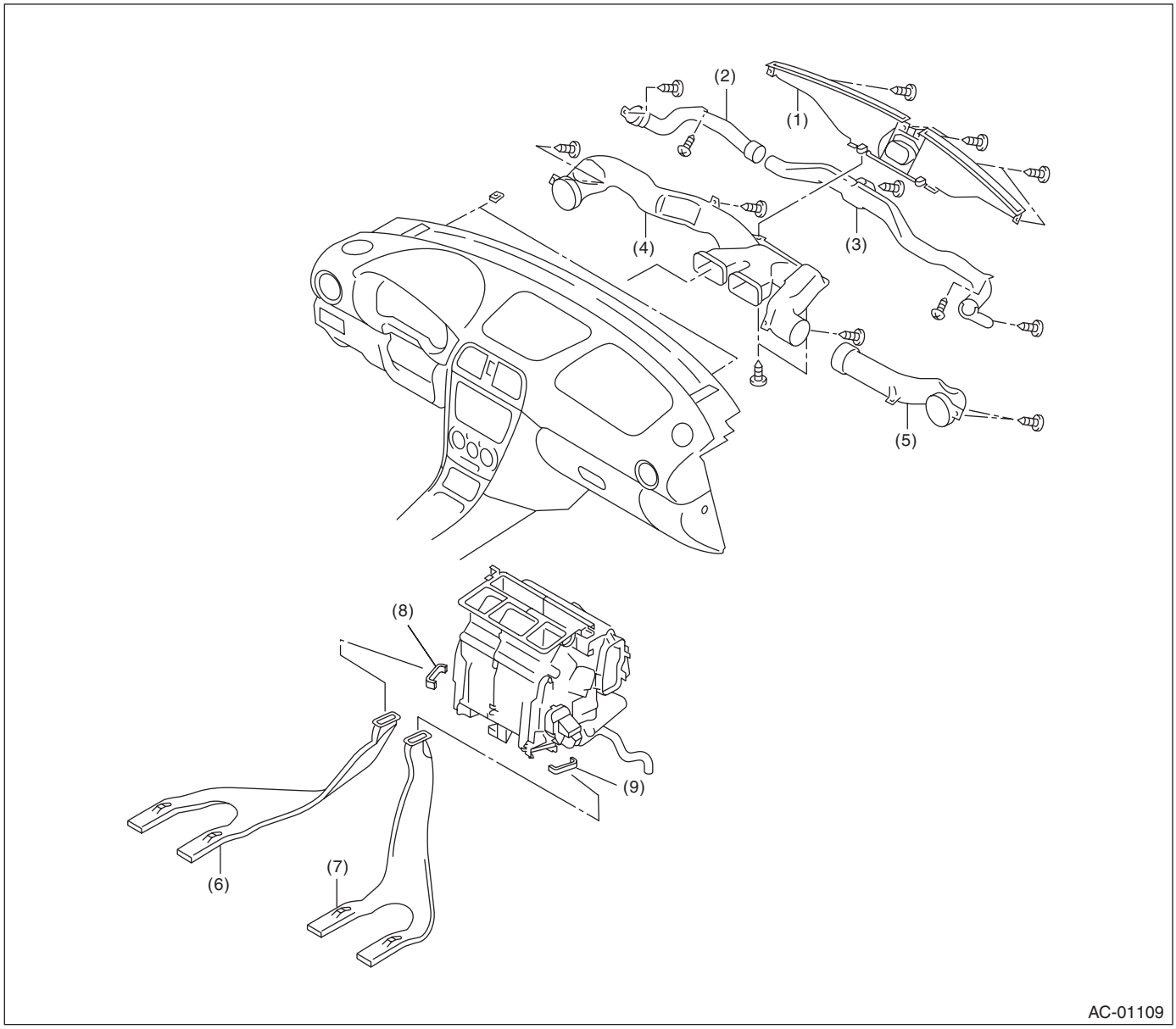

(1)	Front defroster nozzle	(4)	Side ventilation duct (LH)	(7)	Rear heater duct (RH)
(2)	Side defroster duct (LH)	(5)	Side ventilation duct (RH)	(8)	Rear heater duct cover (LH)
(3)	Side defroster duct (RH)	(6)	Rear heater duct (LH)	(9)	Rear heater duct cover (RH)

C: CAUTION

1. HFC-134A A/C SYSTEM

• The cooling system components for the HFC-134a system such as the refrigerant and compressor oil are different from the conventional CFC-12 system components and they are incompatible with each other.
• Vehicles with the HFC-134a system can be identified by the label (A) attached to the vehicle.
Before maintenance, check which A/C system is installed to the vehicle.

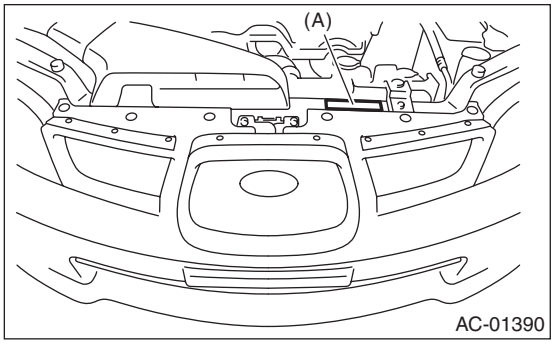

2. COMPRESSOR OIL

• HFC-134a compressor oil has no compatibility with that of CFC-12 system.
• Use only the manufacturer-authorized compressor oil for the HFC-134a system; only use DH-PR.
• Do not mix multiple compressor oils.
If CFC-12 compressor oil is used in the HFC-134a A/C system, the compressor may become stuck due to poor lubrication, or the refrigerant may leak due to swelling of rubber parts.
On the other hand, if HFC-134a compressor oil is used in a CFC-12 A/C system, the durability of the A/C system will be lowered.
• HFC-134a compressor oil is very hygroscopic. When replacing or installing/removing A/C parts, immediately isolate the oil from atmosphere using a plug or tape. In order to avoid moisture, store the oil in a container with its cap tightly closed.

3. REFRIGERANT

• CFC-12 refrigerant cannot be used in a HFC-134a A/C system. HFC-134a refrigerant, also cannot be used in a CFC-12 A/C system.
• If an incorrect or no refrigerant is used, it will result in poor lubrication and the compressor itself may be damaged.

4. HANDLING OF REFRIGERANT

• The refrigerant boils at approx. –30°C (–22°F). When handling it, be sure to wear protective goggles and protective gloves. Direct contact of the refrigerant with skin may cause frostbite.
If the refrigerant gets into your eye, avoid rubbing your eyes with your hands. Wash your eye with plenty of water, and receive medical treatment from an eye doctor.
• Do not heat a service can. If a service can is directly heated, or put into boiling water, the inside pressure will become extremely high. This may cause the can to explode. If a service can must be warmed up, use warm water of 40°C (104°F) or less.
• Do not drop or impact a service can. (Observe the precautions and operation procedure described on the refrigerant can.)
• When the engine is running, do not open the high-pressure valve of manifold gauge. The high-pressure gas will back-flow resulting in an explosion of the can.
• Provide good ventilation and do not work in a closed area.
• In order to prevent global warming, avoid releasing HFC-134a into the atmosphere. Using a refrigerant recovery system, discharge and recycle the gas.

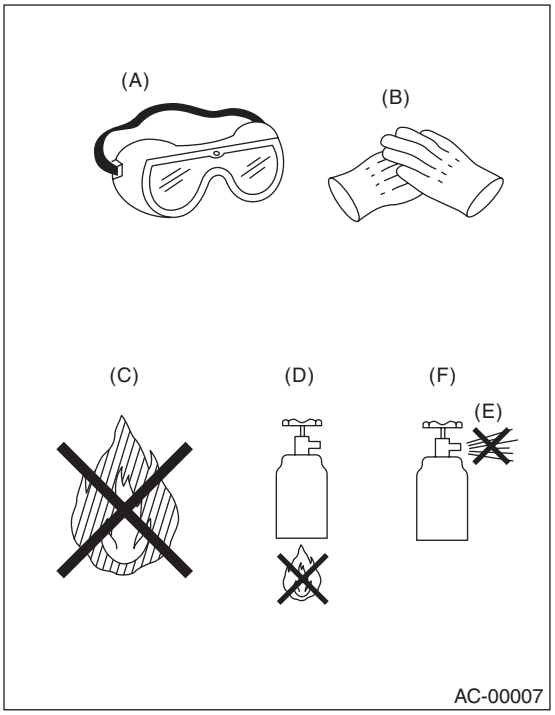

(A) Goggles
(B) Gloves
(C) Avoid open flame
(D) No direct heat on container
(E) Do not discharge
(F) Loosen

5. O-RING CONNECTIONS

- Always use a new O-ring.
- In order to keep the O-rings free of lint which will cause a refrigerant gas leak, perform work without using gloves or waste cloths.
- Apply compressor oil to O-rings to avoid sticking, before installation.
- Use a torque wrench to tighten the O-ring fittings. Over-tightening will result in damage of the O-ring and deformation of the tube end.
- If the operation is interrupted before completing a pipe connection; recap the tubes, components and fittings with a plug or tape to prevent dirt from entering.

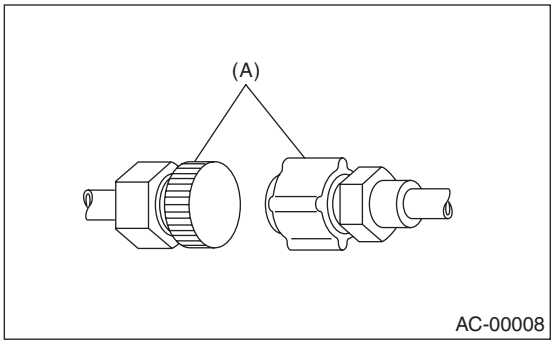

(A) Seal

- Visually check the surfaces and mating surfaces of O-rings, threads and connecting points. If a failure is found, replace the applicable parts.
- Install the O-rings straight against the groove of the tube.

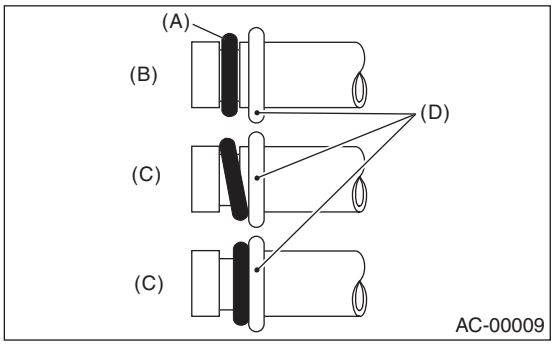

(A) O-ring
(B) OK
(C) NG
(D) Groove

- Use oil specified in the service manual to lubricate the O-rings.

Apply oil to the top and sides of O-rings before installation.
Apply the oil to the O-ring and end of the tube.

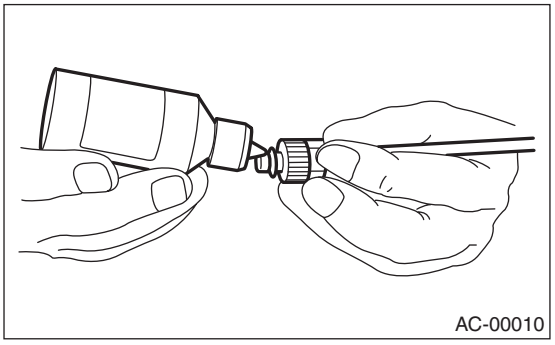

- After tightening, use a clean cloth to remove the excess oil from the connections and any oil which may have run on the vehicle body or other parts.
- If any leakage is suspected after tightening, do not further tighten the connections, but disconnect the connections, remove the O-rings, and check the O-rings, threads, and connections.

D: PREPARATION TOOL

CAUTION:

- **When working on vehicles with HFC-134a system, only use HFC-134a specified tools and parts.**
- **Do not mix CFC-12 tools and parts. If HFC-134a and CFC-12 refrigerant or compressor oil is mixed, it will result in poor lubrication and the compressor itself may be damaged.**
- **In order to prevent the mixture of HFC-134a and CFC-12 parts and liquid, the tool and screw type and the type of service valves used are different. The gas leak detectors for the HFC-134a and CFC-12 systems must also not be interchanged.**

	HFC-134a	CFC-12
Tool & screw type	Millimeter size	Inch size
Valve type	Quick joint type	Screw-in type

Illustration	Tools and Equipment
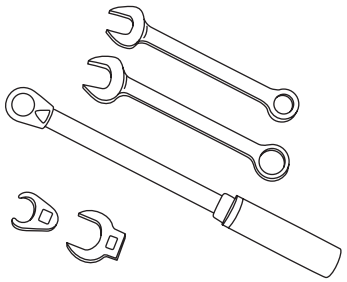 AC-00213	WRENCH Various **WRENCHES** will be required to service any A/C system. 7 — 40 N·m (0.7 — 4.1 kgf-m, 5 — 30 ft-lb) torque wrench and various crowfoot wrenches will be needed. Open end or flare nut wrenches will be needed to hold the tube and hose fittings.
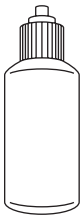 AC-00012	Applicator bottle A small **APPLICATOR BOTTLE** is recommended to apply refrigerant oil to the various parts. It can be available at a hardware or drug store.
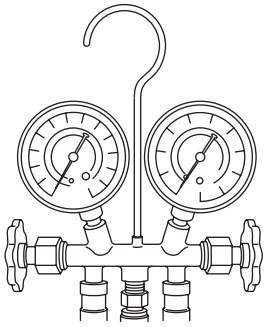 AC-00013	Manifold gauge set A **MANIFOLD GAUGE SET** (with hoses) can be obtained at either a refrigerant supplier or an automotive equipment supplier.
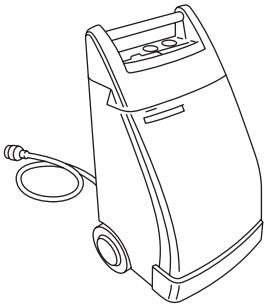 AC-00014	Refrigerant recovery system A **REFRIGERANT RECOVERY SYSTEM** is used for the recovery and recycling of A/C system refrigerant after contaminants and moisture have been removed from the refrigerant.
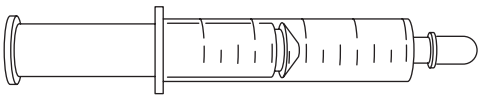 AC-00015	Syringe A graduated plastic **SYRINGE** will be needed to add oil into the system again. A syringe can be available at a pharmacy or drug store.

Illustration	Tools and Equipment
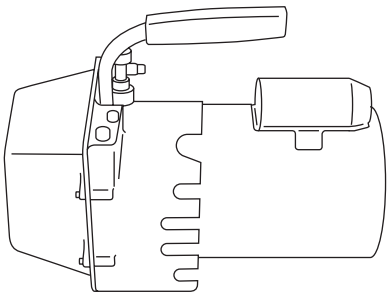 AC-00016	Vacuum pump A **VACUUM PUMP** (in good working condition) is necessary, and may be obtained from either a refrigerant supplier or an automotive equipment supplier.
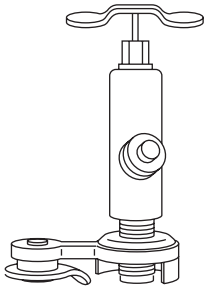 AC-00017	Can tap A **CAN TAP** for the 397 g (14 oz.) can is available at an automotive equipment supplier.
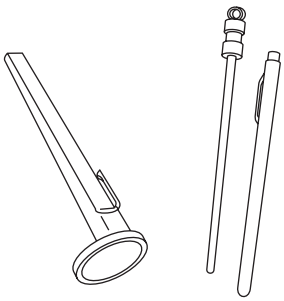 AC-00018	Thermometer A Pocket **THERMOMETERS** are available from either industrial hardware stores or commercial refrigeration supply houses.
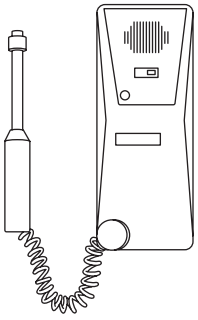 AC-00019	Electronic leak detector An **ELECTRONIC LEAK DETECTOR** can be available at either a specialty tool supplier or an A/C equipment supplier.
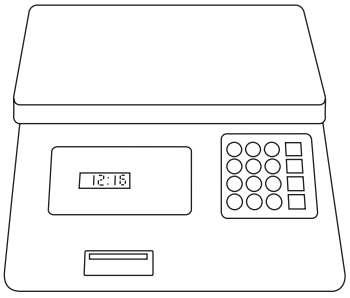 AC-00020	Weight scale A **WEIGHT SCALE** such as an electronic charging scale or a bathroom scale with digital display will be needed, if a 13.6 kg (30 lb) refrigerant container is used.